(19) Europäisches Patentamt
European Patent Office
Office européen des brevets

EP003932505A1

(11) **EP 3 932 505 A1**

(12) **EUROPEAN PATENT APPLICATION**

(43) Publication date:
05.01.2022 Bulletin 2022/01

(51) Int Cl.:
A63G 7/00 (2006.01) ***B60N 2/24 (2006.01)***
B60N 2/42 (2006.01)

(21) Deposit number: **20183821.6**

(22) Filing date: **02.07.2020**

(84) Designated Contracting States:
AL AT BE BG CH CY CZ DE DK EE ES FI FR GB GR HR HU IE IS IT LI LT LU LV MC MK MT NL NO PL PT RO RS SE SI SK SM TR

Designated Extension States:
BA ME

Designated commit states:
KH MA MD TN

(71) Applicant: **Bolliger & Mabillard Consulting Engineers SA**
1870 Monthey (CH)

(72) Inventors: •
ZÜRCHER, Alain
1142 Pampigny (CH)
• **BERRA, Eric**
1870 Monthey (CH)

(74) Authorized: **Noll, Ronald et al**
ABREMA SA
Theaterlaan 16
PO Box 5027
1002 Lausanne (CH)

(54) **PASSENGER HOLDING SYSTEM FOR ROLLER COASTERS**

(57) In particular, a holding system is described passenger seat (1) for roller coasters designed to maintain a passenger (P) in posture essentially seated or lying down, the passenger restraint system (1) comprising a fixed column (10) and a column of seat (20) designed to support and restrain the passenger (P), which seat column (20) is coupled to the fixed column (10) so as to be movable relative to the fixed column (10) during a ride on the roller coaster. The seat column (20) is preferably coupled to the fixed column (10) by means of a articulated link (30) and the pitch holding system (1) further comprises a balancing device (15) balancing the seat column (20), which balancing device (15) is fixed, at a first end (15A), to the fixed column (10) and, at a second end (15B), to the seat column (20). the balancing device (15) can advantageously be configured to provide vertical movement of the seat column (20) when traveling over mountains rollers depending on the vertical acceleration exercising on the passenger(P).

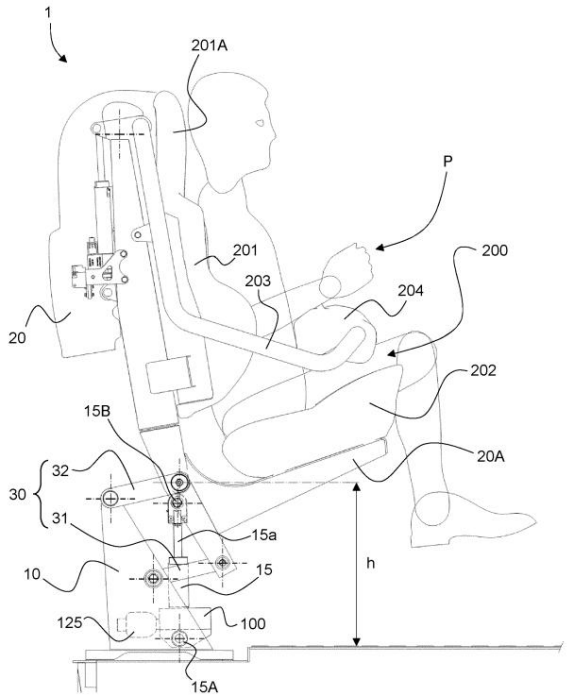

Fig. 1

Description

TECHNICAL AREA

The present **invention** relates generally to a passenger holding system for a roller coaster, and more specifically such a passenger holding system designed to maintain a wise step in essentially seated or lying posture during a course on the roller coaster.

TECHNOLOGICAL BACKGROUND

[0002] Such passenger holding systems are known in the state of the art, in particular from publications of European patent applications Nos. EP 0 545 860 A1, EP 1 020 212 A1, EP 1 020 213 A1, EP 1 201 280 A2, and EP 1 215 091 A2, all in the name of the present Applicant.

[0003] European patent application No. EP 0 545 860 A1 describes a so-called "inverted" roller coaster installation (or "inverted coasters") in which each passenger holding system is designed to hold a passenger in an essentially seated posture during the journey on the roller coaster, suspended below the rails supporting the vehicle carrying the passenger retention system, with the legs in the air, without any wall or floor around the passenger.

[0004] European patent application No. EP 1 020 212 A1 describes a passenger holding system designed to hold a passenger in an essentially seated posture in a seat during the journey on the roller coaster, the passenger's feet resting on a floor of the vehicle carrying the passenger restraint system.
The passenger holding system comprises a tilting bar surmounted by a retaining element intended to hold the passenger in the seat, which retaining element has a particular shape intended to come into contact with the passenger's thighs. This type of passenger restraint system is used in particular in high-speed roller coaster installations without inversion (or "hyper coasters").

[0005] European patent application No. EP 1 020 213 A1 describes an installation for floorless roller coasters (or “floorless coasters”) in which each passenger holding system is designed to hold a passenger in an essentially seated posture during of the course on the roller coaster, above the rails supporting the vehicle carrying the passenger restraint system, the legs in the void, without an expensive plane under the feet of the passenger.

[0006] European patent application No. EP 1 201 280 A2 describes a so-called "flying" roller coaster installation (or "flying coasters") in which each passenger holding system is designed to hold a passenger in a posture essentially lying down during the course on the roller coaster, suspended below the rails supporting the vehicle carrying the passenger holding system, the passenger's back arranged substantially parallel to the track formed by the rails. In this case, the passenger holding system further comprises a leg restraint device. A variant of such a passenger leg restraint device is also described in European patent application No. EP 1 215 091 A2.

[0007] Irrespective of the essential sitting or lying posture of the passenger, the passenger holding systems described in the above-mentioned publications are all arranged so as to be fixedly attached to the vehicle carrying the passengers, without the possibility of relative movement with respect to said vehicle during the course on the roller coaster. The movement to which the passengers are subjected is thus directly induced and determined by the particular layout of the path taken by the vehicle carrying the passengers, each passenger feeling the sensations resulting from the changes of direction and acceleration defined by this layout.

[0008] There remains a need to provide a system for maintaining a passenger in a posture that is essentially seated or lying down, which offers greater sensations to the passenger, while ensuring increased comfort.

DISCLOSURE OF THE INVENTION

[0009] A general object of the present invention is therefore to provide a system for maintaining a passenger in an essentially seated or lying posture which overcomes the drawbacks of the known solutions.

[0010] More particularly, an object of the present invention is to propose such a solution which guarantees both adequate restraint of the passenger while ensuring greater sensations as well as better comfort for the passenger during the journey on the mountains Russians.

Furthermore, an object of the present **invention** is to provide such a solution which is robust and reasonably simple to implement.

Another object of the present invention is to provide such a solution which is reliable and whose maintenance is facilitated.

[0013] In view of the aforementioned aims, it is proposed, according to the present invention, a passenger holding system for roller coasters, the characteristics of which are listed in claim 1, namely such a passenger holding system designed so as to to hold a passenger in an essentially seated or lying posture, the passenger holding system being in particular characterized in that it comprises a fixed column and a seat column designed to support and hold the passenger, which seat column is coupled to the fixed column so as to be movable relative to the fixed column during a course on the roller coaster. The passenger restraint system further comprises a balancing device ensuring the balancing of the seat column, which balancing device is

fixed, at a first end, to the fixed column and, at a second end, to the seat column.

[0014] According to a first aspect of the invention, the seat column is coupled to the fixed column by means of an articulated connection, and the first and second ends of the balancing device fixed respectively to the fixed column and the seat column are hinged. According to this first aspect of the invention, and unlike known solutions, it will therefore be noted that the passenger is retained in a sitting or lying position by means of a movable seat column, in this case by via an articulated connection between the column of seat and a stationary column, the seat column being balanced by the balancing device to maintain the seat column away from the fixed column. This offers the possibility of a relative movement of the passenger with respect to the vehicle carrying the passenger retention system. The articulated connection also ensures a great softness and flexibility of movement. This hinged connection is moreover particularly simple and compact, while remaining robust.

[0015] According to one embodiment particularly preferred of this first aspect of the invention, the connection articulated comprises a set of levers articulated on the fixed column and on the seat column and forming a connection parallelogram between the fixed column and the column of seat. This ensures optimal guidance of the column of seat on the fixed column, further ensuring that the orientation of the seat column with respect to a vertical direction remains unchanged, regardless of the height position of the seat column. It will however be understood that the invention is not specifically limited to the use of a set of articulated levers, such as as described and illustrated, other binding configurations articulated being perfectly possible.

[0016] Preferably, the balancing device extends through an intervening space of the link articulated, which leads to a particularly compact arrangement.

[0017] Particularly advantageously, according to a second aspect of the invention, the balancing device can be configured to ensure a displacement vertical of the seat column when traveling on the roller coaster based on vertical acceleration exerted on the passenger. This second aspect is moreover applicable independently of the way with which the seat column is coupled to the fixed column.

[0018] In this context, the balancing device can also be equipped with a system allowing to adjust and control the vertical deflection speed of the seat column.

[0019] The balancing device can be a device spring, such as a gas spring, or, preferably, a hydraulic or hydropneumatic device, in particular a hydraulic or hydropneumatic cylinder. In this last case, the balancing device can then be equipped with a hydraulic fluid flow adjuster to adjust and control the speed of travel vertical of the seat column. It will be understood any time that the invention is not specifically limited to the use of a spring device or a hydraulic or hydropneumatic device as a balancing device, other types of balancing devices being perfectly possible.

[0020] With regard to the use of a hydraulic or hydropneumatic device for balancing the seat column, the passenger retention system also preferably carries an accumulator coupled to the balancing device, which accumulator is capable of generate hydraulic pressure necessary to balance the weight of the seat column. This accumulator can in particular be a hydropneumatic accumulator.

[0021] Still in the context of the use of a hydraulic or hydropneumatic device for balancing the seat column, an internal pressure of the hydraulic or hydropneumatic device is preferably adjustable. In particular, this allows you to modify and vary the sensitivity of the system to accelerations throughout the course on the roller coaster. The intensity of the effect generated may therefore vary according to the chosen internal pressure.

[0022] According to a preferred variant, the system of passenger restraint is configured so that the seat column occupies, in the presence of the passenger and in the absence of any vertical acceleration other than that due to gravity, a low position relative to the fixed column and, more preferably still, so that the assembly formed by the seat column and the passenger can rise from the low position as soon as said assembly is subjected to a vertical acceleration such that the resultant force due to the vertical acceleration exerted on the seat column and the passenger becomes weaker than the thrust force exerted by the positive balancing device. In the absence of the passenger, the seat post can either be balanced at the means of the balancing device so that the column seat is in a high or low position.

[0023] In this latter context, it will be understood so that the seat column and the passenger will tend to rise from the low position as soon as a certain vertical acceleration threshold is reached. More precisely, when the vertical acceleration becomes lower at a certain threshold determined by the balance of the various forces acting on the seat column and the passenger, for example when going over a bump, the steering column seat and the passenger restrained by it will tend to undergo an ascending phase and to leave the low position to rise vertically in the direction of a position high, even until reaching the travel limit of the seat column. As soon as the vertical acceleration increases again to exceed said threshold. the resultant of the forces applied will tend to bring the whole consisting of the seat column and the passenger towards the low position.

[0024] Finally, the balancing device can also

be equipped with a damping system, and thus limit oscillations as well as the risk of shock when the system comes to a stop.

[0025] Also claimed are mountains coasters (or “roller coaster”) comprising at least one passenger holding system according to the invention.

[0026] Other aspects of the invention are disclosed in the remainder of this description.

BRIEF DESCRIPTION OF THE DRAWINGS

The **characteristics** and advantages of the present invention will appear more clearly on reading the following detailed description of various embodiments of the invention, which are presented solely by way of non-limiting examples and are illustrated by the attached drawings where:

- Figure 1 is a side view of a system of passenger restraint according to one embodiment of the invention; and
- Figure 2 is a side view of the passenger holding system of Figure 1 illustrating a vertical movement of said holding system during the roller coaster ride.

MODES FOR CARRYING OUT THE INVENTION

The **present** invention will be described with reference to various preferred embodiments as illustrated in particular in the appended Figures.

[0029] Figure 1 shows a side view of a passenger holding system for a roller coaster, which system is designated globally by the reference digital 1, according to one embodiment of the invention. This passenger restraint system 1 is designed to to hold a passenger, also illustrated schematically in Figure 1 and designated by the reference P, which passenger P is here supported and held in posture essentially seated by the support system of passenger 1.

[0030] The passenger holding system 1 comprises a fixed column 10 which is fixed by its base to a support platform or may alternatively form an integral part of this support platform. This platform is typically part of a vehicle (not shown) designed to move on roller coasters, typically along rails. Passenger P is supported and retained by a seat column 20, which is coupled to the fixed column 10 so as to be movable relative to the fixed column 10 as will be detailed further away. In this regard, the height h shown in Figure 1 should be understood as variable.

The **seat** column 20 is provided with a positive retaining device 200 configured to accommodate the passenger P in a seated position, which retaining device 200 can take various forms. According to the embodiment illustrated by way of illustrative example in Figure 1, the retainer 200 essentially comprises a backrest 201 fixed to the seat column 20, against which passenger P can lean on, back placed against the folder 201, which folder 201 is further provided a headrest 201A and a pair of bare side retaining elements configured to enclose the passenger P at the back and arm level. The retainer 200 further comprises a seat 202 carried by a support 20A of the seat column 20, which seat 202 is also provided with a pair of retainers side hugging the passenger at the hips and thighs like a bucket seat. The restraint device 200 also includes a retaining bar. frontal security 203, pivotally mounted on a part upper part of the seat column 20, and designed to be lowered above and around the passenger's torso P. This frontal safety bar 203 comprises here, on its distal end, a retainer 204 which comes pressing against the abdomen and the upper part of the thighs of the passenger P when the frontal safety bar 203 is lowered. This safety bar is typically locked in position, once positioned on the passenger's thighs by a locking device adequate.

[0032] It will be understood that the invention is not specifically limited to a passenger holding system comprising a restraint device 200 as specifically illustrated, other configurations of devices restraint being perfectly conceivable.

[0033] According to a first aspect of the invention, the seat column 20 is coupled to the fixed column 10 at the means of an articulated connection designated by the reference digital 30 and passenger restraint system 1 further comprises a balancing device ensuring the balancing of the seat column 20, which device balance exerts a vertical thrust force of direction opposite to the weight exerted by the seat column 20 and such as to partially or totally compensate for the weight exerted by the seat column 20. This balancing device here preferably comprises a hydraulic (or hydropneumatic) cylinder 15 fixed, to a articulated first end 15A, to the fixed column 10 and, at a second articulated end 15B, at the column of seat 20. In the preferred embodiment variant illustrated, the reference 15a designates a piston of the hydraulic cylinder 15, integral, at the articulated end 15B, of the seat column 20.

[0034] The articulated connection 30 can take forms varied. Preferably, as illustrated, this articulated connection 30 comprises a set of levers, respectively lower 31 and upper 32, advantageously forming a parallelogram connection between the fixed column 10 and the seat column 20. More specifically, the articulated link 30 here comprises a pair of lower levers 31 hinged at each end to the fixed column 10, with a hand, and to the seat column 20, on the other hand. Likewise, the articulated link 30 comprises a pair of upper levers 32, the effective length of which is identical to the

effective length of the lower levers 31, which upper levers 32 are likewise hinged at each end to the fixed column 10, on the one hand, and to the column of seat 20, on the other hand.

We can immediately note the very compact **configu** ration of the articulated connection 30. The geometry of the articulated connection 30 is preferably chosen so that the seat column 20 can move along an essentially vertical trajectory, it being however noted that the parallelogram connection induces a relative movement between the fixed column 10 and the seat column 20 along an arcuate trajectory circle, the range of motion being determined by the effective working amplitude of the balancing device 15. As such, Figure 1 shows the holding system 1 in a configuration where the seat column 20 is placed in a high position, the hydraulic cylinder 15 being illustrated in a position where the piston 15a is almost fully extended.

[0036] The ends 15A, 15B of the balancing device 15 are articulated here, in the sense that the device balancer 15 undergoes a slight rotational movement around an axis coinciding with the lower end 15A of the balancing device 15 depending on the positioning of the seat column 20 with respect to the fixed column 10, generating a corresponding relative movement of the balancing device 15 with respect to the fixed column 10 and to the seat column 20. More specifically, in the example shown in Figure 1, the bottom of the balancing device 15 is secured to a support element 100 which is hinged to the column fixed 10 at the articulated end 15A. This support element 100 is also articulated in the sense that it follows the movement of the balancing device 15 and undergoes therefore a corresponding relative motion with respect to the fixed column 10. This support element 100 is mounted, with the associated balancing device 15, inside of a housing made in the fixed column 10.

Advantageously , the balancing device 15 extends through an intervening space of the link articulated 30, here through the space formed between the lower levers 31.

[0038] The use of an articulated connection between the fixed column 10 and the seat column 20, such as the connection illustrated in Figure 1, offers easy movement as well as great softness and flexibility of shift. This articulated connection is moreover simple and compact, while remaining robust.

[0039] Instead of the hydraulic cylinder (or hydro pneumatic) 15 illustrated, it is possible the case necessary to use a spring device, such as a gas spring, as a balancing device, or any other suitable balancing device.

[0040] Even more advantageously, according to another aspect of the invention which is independently applicable of the aforementioned articulated connection, the balancing device 15 is configured to ensure a deflection vertical of the seat column 20 during the course on the roller coaster, depending on the acceleration vertical exerted on the passenger P. This deflection vertical aims to allow the passenger P to undergo a vertical movement according to the route followed by the vehicle carrying the passenger P, according to an ascending phase and a descending phase, a movement whose amplitude can vary. Figure 2 shows the system of keeping passenger 1 in the low position (on the left), the seat column 20 disposed at a first height h1 relative to the floor, and in the high position (on the right), the seat column 20 disposed at a second height h2 relative to the floor. The maximum amplitude of the vertical movement of the seat column 20 and of the pitch P carried by the latter is highlighted in Figure 2 and designated by the reference A.

[0041] According to the embodiment discussed, the position high preferably corresponds to the occupied position by the seat column 20 in the absence of the passenger P. In other words, the passenger restraint system 1 is here configured so that the seat column 20 is balanced in order to occupy a high position relative to the fixed column 10 in the absence of the passenger P. Before the start of the passenger boarding phase, each passenger holding system 1 is thus by default balanced in the high position, i.e. that the balancing device 15 takes a deployed position bringing the seat column 20 in the high position. During the boarding phase, as soon as the step wise P takes place on the seat, the addition of the weight of the step wise P causes a break in the balance of forces of the whole, which has the effect of bringing the column seat 20 in the low position relative to the column fixed 10.

[0042] However, it is alternatively possible to configure the passenger holding system 1 so that the seat column 20 is balanced in order to occupy a low position relative to the fixed column 10 itself in the absence of the passenger P. In this case, it will therefore be understood that the seat column 20 will already occupy by lacking a low position during the boarding phase and that the thrust force exerted by the device balance 15 will be comparatively weaker than in the previously mentioned case.

[0043] In both cases, it will be understood that the assembly consisting of the seat column 20 and of the passenger P retained by the latter will occupy by default the low position in the absence of any vertical acceleration other than that due to gravity (it being understood that we are speaking here of the vertical acceleration due to earth's gravity equivalent to 9.81 m/s2) and this as long as the vertical acceleration will not decrease below a certain threshold determined by the balance of the forces applied, namely in particular the force due to the vertical acceleration acting on the seat column 20 and the passenger P (including the force due to gravity and the vertical acceleration caused by the journey on the roller coaster) and the thrust force exerted by the balancing device 15.

[0044] When the vehicle carrying the passengers P leaves the boarding area, and as long as the acceleration vertical remains high and such that the resulting force exerted on the seat column 20 and the passenger P is greater than the thrust force of the balancing device 15, the system maintains itself in the low position.

[0045] Preferably, the pitch hold system 1 is here configured so as to rise from the low position when the assembly consisting of the seat column 20 and the passenger P is subjected to a vertical acceleration such that the resultant force acting on the assembly becomes weaker than the force of thrust exerted by the balancing device 15, which occurs for example when going over a bump. The seat column 20 and the passenger P retained by this last will thus tend to leave the low position and rise vertically (ascending phase) in the direction from the high position, or even until reaching the limit of seat column stroke 20.

[0046] As soon as the vertical acceleration increases again to reach a value such as the strength resultant exerted on the seat column 20 and the passenger P again becomes greater than the thrust force of the balancing device 15, the seat column 20 and the passenger P retained by the latter will tend to turn back into the low position (downward phase).

[0047] In this respect, it is preferable to equip the balancing device 15 with a damping system, this which makes it possible in particular to reduce any phenomenon of bone cillation and to avoid arriving at a hard stop during the ascending or descending phase. It can independently be an internal damping system or external. It will be understood that this amortization is effective for each column movement cycle of seat 20.

[0048] As already mentioned above, the vertical travel of the seat column 20 can be works independently of the use of a hinged connection 30 between the fixed column 10 and the seat column 20. As an alternative example, the vertical deflection of the balancing device 15 could likewise be placed implemented as part of a maintenance system where the seat column would be guided relative to the column fixed by means of slides or slides.

[0049] As can be seen in Figure 1, the cylinder hydraulic 15 is preferably coupled to an accumulator 125, which accumulator 125 is able to generate hydraulic pressure necessary to balance the seat column weight 20. This accumulator 125 can in particular be a hydropneumatic accumulator, in particular a hydropneumatic accumulator of the bladder type, which is filled with a gas (for example nitrogen) which acts as a compressible fluid and allows energy to be stored. In this case, this accumulated energy is used to generate the hydraulic pressure necessary to balance the weight of the seat column 20, namely to compensate for the force exerted on the hydraulic cylinder 15 by the weight of the seat column 20. As shown in Figure 1, the accumulator 125 is advantageously carried by the support element 100 previously mentioned. The assembly consisting of the hydraulic cylinder 15, the accumulator 125 and the support element 100 therefore forms a particularly compact arrangement and that it is easy integrated into the system.

In the example illustrated where the balancing device 15 is of a hydraulic (or hydropneumatic) nature, it is particularly advantageous to provide means for adjusting the internal pressure of the hydraulic (or hydropneumatic) device. this makes it possible to vary the sensitivity of the balancing device 15 (and therefore of the entire system) to the vertical acceleration exerted throughout the course on the Russian mountains. The intensity of the effect may therefore vary according to the internal pressure chosen.

[0051] Furthermore, the balancing device 15 can be equipped with a system to adjust and control the speed of the vertical movement of the steering column seat 20. In the example shown, this can be achieved by adding a hydraulic fluid flow adjuster so as to adjust the speed of the piston 15a also although during its opening (in ascending phase) that when it closes (in descending phase). This adjuster flow rate can be internal to the hydraulic cylinder 15 or external, namely placed in the associated hydraulic circuit to jack 15.

[0052] It will generally be understood that various modifications and/or obvious improvements for those skilled in the art can be made to the modes embodiments described in this description without depart from the scope of the invention defined by the claims annexed. In particular, the articulated link and the vertical movement are two distinct functions which can be applied separately from each other, or, very advantageously, in combination.

[0053] Furthermore, although the Figures show a embodiment where a dedicated accumulator is associated with the maintenance system, other solutions are possible. For example, in a variant, a centralized accumulator, of greater capacity, could be coupled to several holding systems, in particular to each holding system of the same row passengers or the same vehicle. In such a case, we will therefore understand that the accumulator will no longer necessarily be placed on and integrated into each system holding, but will be placed in the vicinity of the row of passengers concerned or on the vehicle concerned and that all of the hydraulic systems of the various holding systems will then be coupled to a single centralized accumulator.

[0054] Furthermore, although Figures 1 and 2 show a system for maintaining a passenger in an essentially seated posture where the fixed column is arranged on the floor of a vehicle, it will be understood that the same principle is applicable in the event of an installa

reversed position where the passenger restraint system is suspended under a vehicle like the installation described in European patent application No. EP 0 545 860 A1. The invention is likewise also applicable to a flying installation where the support systems passenger compartments are designed to support and retain passengers in a predominantly lying posture in the image of the installation described in the euro patent application peen No. EP 1 201 280 A2.

[0055] In addition, and independently of the foregoing, the fixed column can either consist of a element fixed to the support platform or to the frame of the vehicle carrying the passenger restraint system or be an integral part of this support platform or of this chassis.

LIST OF REFERENCE SIGNS USED IN THIS DESCRIPTION AND IN THE DES SINS

[0056]

1	passenger holding system according to one embodiment of the invention
10	fixed column
15	balancing device, in particular device hydraulic or hydropneumatic (e.g. hydraulic or hydropneumatic cylinder)
15a	hydraulic or hydropneumatic cylinder piston 15
15A	lower end of balancing device 15, hinged to fixed column 10
15B	upper end of balancing device 15 (upper end of piston 15a), hinged to seat column 20
20	seat column, vertically movable by relative to fixed column 10
20A	seat support
30	articulated connection between the fixed column 10 and the seat column 20 / parallelogram linkage
31	pair of lower levers of the articulated link 30
32	pair of upper levers of the articulated link 30
100	support element mounted at the lower end 15A of the balancing device 15 and mounted at inside a housing practiced in the colon fixed 10
125	accumulator for balancing the weight of the seat column 20 (in particular hydropneumatic accumulator)
200	passenger restraint device P integral with the seat column 20
201	backrest with side retainers
201A	headrest integrated into the backrest 201
202	seat with side retainers
203	front safety bar pivotally mounted on the seat column 20
204	retainer mounted at the distal end front safety bar 203
P	passenger in a predominantly seated posture
h	height (variable) of the seat column 20
h1	seat column height 20 in position low
h2	seat column height 20 in position high
A	amplitude of travel of the seat column 20

Claims

1. A passenger restraint system (1) for my Russian tagnes designed to hold a passenger (P) in a mainly seated or lying posture, **characterized in that** the system for maintaining passenger (1) comprises a fixed column (10) and a seat column (20) designed to support and retain the passenger (P), which seat column (20) is coupled to the fixed column (10) so as to be movable relative to the fixed column (10) during a roller coaster ride, and **in that** the passenger restraint system (1) further comprises a balancing device (15) balancing the seat column (20), which balancing device (15) is fixed, at a first end (15A), to the fixed column (10) and, at a second end (15B), to the seat column (20).

2. The passenger restraint system (1) according to claim 1, **characterized in that** the column seat (20) is coupled to the fixed column (10) at the means of an articulated connection (30), and **in that** the first and second ends (15A, 15B) of the balancing device (15) fixed respectively to the fixed column (10) and to the column of seat (20) are articulated.

3. The passenger restraint system (1) according to claim 2, **characterized in that** the connection articulated (30) comprises a set of levers (31, 32) articulated on the fixed column (10) and on the column of seat (20) and forming a parallelogram connection between the fixed column (10) and the seat column (20).

4. The passenger restraint system (1) according to claim 2 or 3, **characterized in that** the positive balancing device (15) extends through an intermediate space of the articulated connection (30).

5. The passenger restraint system according to one any of the preceding claims, **characterized in that** the balancing device (15) is configured to provide a vertical deflection of the seat column (20) when traveling on the

roller coaster as a function of the vertical acceleration exerted on the passenger (P).

6. The passenger restraint system (1) according to claim 5, **characterized in that** the device balancing (15) is equipped with a system allowing both to adjust and control the speed of travel vertical of the seat column (20).

7. The passenger retention system (1) according to one any of the preceding claims, **characterized in that** the balancing device (15) is a spring device, in particular a gas spring.

8. The passenger restraint system (1) according to one any one of claims 1 to 6, **characterized in that** the balancing device (15) is a hydraulic or hydropneumatic device, in particular a hydraulic or hydropneumatic cylinder.

9. The passenger restraint system (1) according to claim 6, **characterized in that** the device balancing device (15) is a hydraulic device or hydropneumatic, in particular a hydraulic or hydropneumatic cylinder, and **in that** the balancing device (15) is equipped with a hydraulic fluid flow adjuster making it possible to adjust and control the speed of the vertical movement of the seat column (20).

10. The passenger restraint system (1) according to claim 8 or 9, **characterized in that** the passenger holding system (1) further comprises an accumulator (125) coupled to the balancing device (15) and able to generate a hydraulic pressure necessary for balancing the weight of the column seat (20), which accumulator (125) is preferably a hydropneumatic accumulator.

11. The passenger restraint system (1) according to one any one of claims 8 to 10, **characterized in that** an internal pressure of the hydraulic or hydropneumatic device is adjustable.

12. The passenger restraint system (1) according to one any of the preceding claims, **characterized in that** the passenger restraint system (1) is configured such that the seat column (20) occupies, in the presence of the passenger (P) and in the absence of any vertical acceleration other than that due to gravity, a low position relative to the fixed column (10).

13. The passenger restraint system (1) according to claim 12, **characterized in that** the system passenger restraint (1) is configured so that the assembly formed by the seat column (20) and passenger seat (P) can rise from the low position if said assembly is subject to a vertical acceleration such as the resultant force acting on the seat column (20) and the passenger (P) becomes weaker than the thrust force exerted by the balancing device (15).

14. The passenger restraint system (1) according to one any of the preceding claims, **characterized in that** the balancing device (15) is equipped with a damping system.

15. Roller coaster comprising at least one passenger holding system (1) according to any one of the preceding claims.

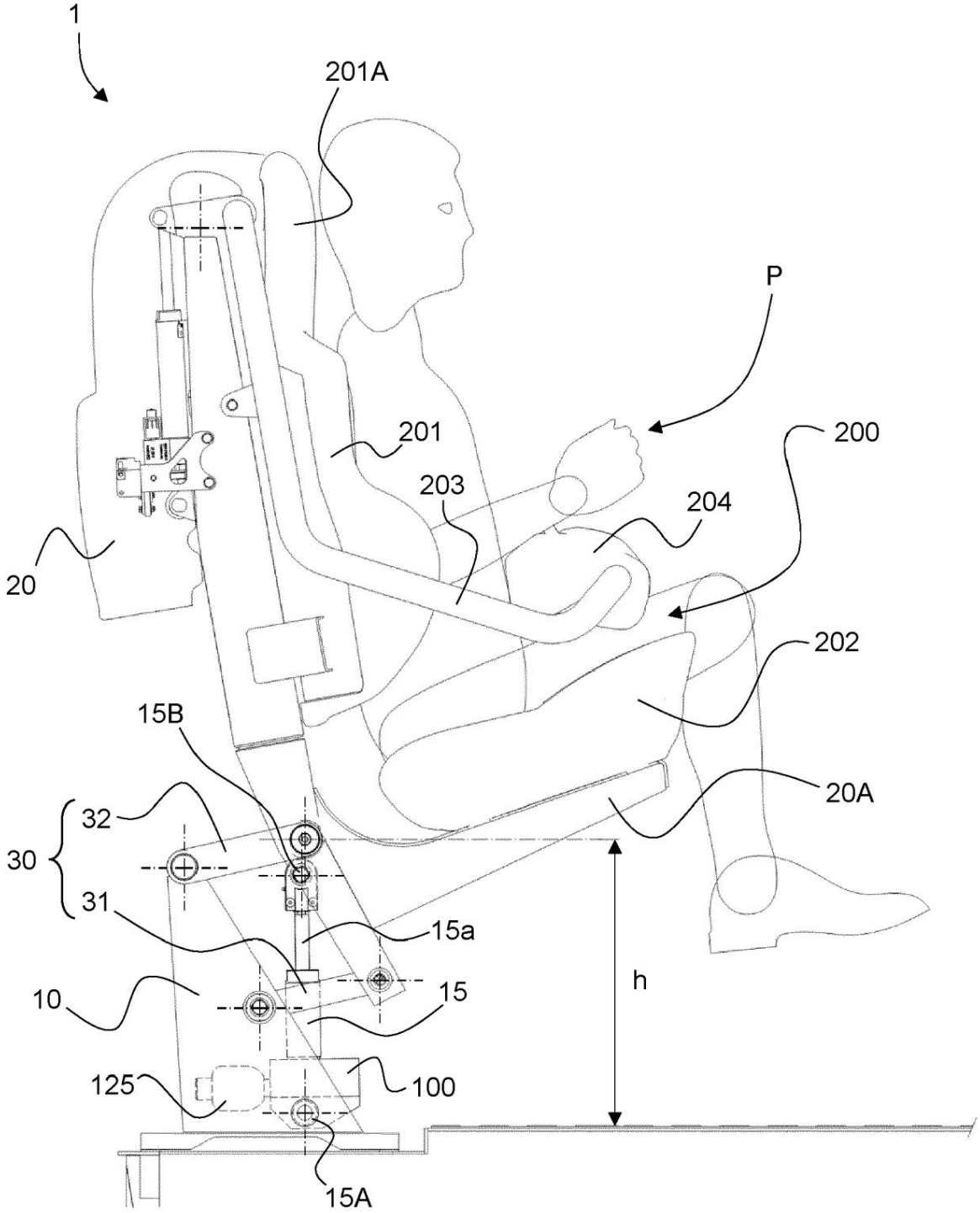

Fig. 1

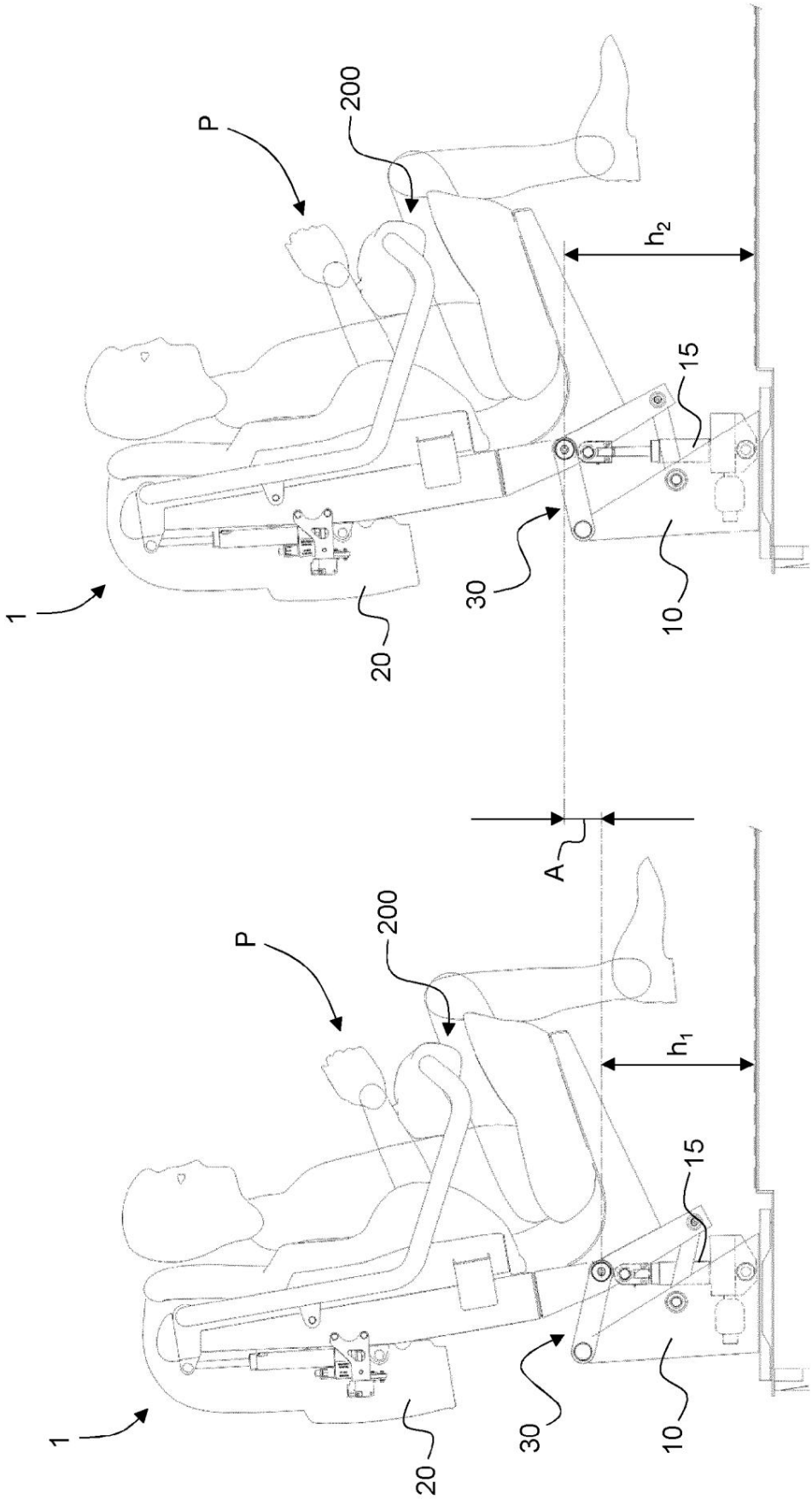

Fig. 2

Europäisches Patentamt
European Patent Office
Office européen des brevets

RAPPORT DE RECHERCHE EUROPEENNE

Numéro de la demande
EP 20 18 3821

DOCUMENTS CONSIDERES COMME PERTINENTS

Catégorie	Citation du document avec indication, en cas de besoin, des parties pertinentes	Revendication concernée	CLASSEMENT DE LA DEMANDE (IPC)
X	WO 2007/136245 A1 (VEKOMA RIDES ENG BV [NL]; BLONK STEFANUS PETRUS CORNELIS [NL] ET AL.) 29 novembre 2007 (2007-11-29) * Figure 5 et passages correspondants de la description * -----	1,2,4,5, 7,8, 12-15	INV. A63G7/00 B60N2/24 B60N2/42
X	US 7 070 153 B1 (STENARD JOHN KEVIN [US]) 4 juillet 2006 (2006-07-04) * Figures 9, 10, 14 et passages correspondants de la description * -----	1-6, 8-11,14, 15	
A	FR 2 442 381 A1 (MILSCO MFG CO [US]) 20 juin 1980 (1980-06-20) * page 5, ligne 28 - page 16; figures * -----	1-14	
A	FR 2 084 495 A5 (UNIVERSAL OIL PROD CO) 17 décembre 1971 (1971-12-17) * page 4, ligne 31 - page 9; figures * -----	1-14	

DOMAINES TECHNIQUES RECHERCHES (IPC)
A63G B60N

Le présent rapport a été établi pour toutes les revendications

Lieu de la recherche	Date d'achèvement de la recherche	Examinateur
Munich	24 novembre 2020	Bagarry, Damien

CATEGORIE DES DOCUMENTS CITES

X : particulièrement pertinent à lui seul
Y : particulièrement pertinent en combinaison avec un autre document de la même catégorie
A : arrière-plan technologique
O : divulgation non-écrite
P : document intercalaire

T : théorie ou principe à la base de l'invention
E : document de brevet antérieur, mais publié à la date de dépôt ou après cette date
D : cité dans la demande
L : cité pour d'autres raisons
.....
& : membre de la même famille, document correspondant

1

EPO FORM 1503 03.82 (P04C02)

ANNEXE AU RAPPORT DE RECHERCHE EUROPEENNE RELATIF A LA DEMANDE DE BREVET EUROPEEN NO. EP 20 18 3821

La présente annexe indique les membres de la famille de brevets relatifs aux documents brevets cités dans le rapport de recherche européenne visé ci-dessus.
Lesdits members sont contenus au fichier informatique de l'Office européen des brevets à la date du
Les renseignements fournis sont donnés à titre indicatif et n'engagent pas la responsabilité de l'Office européen des brevets.

24-11-2020

Document brevet cité au rapport de recherche		Date de publication	Membre(s) de la famille de brevet(s)		Date de publication
WO 2007136245	A1	29-11-2007	DK	2024045 T3	04-03-2013
			EP	2024045 A1	18-02-2009
			US	2010236444 A1	23-09-2010
			WO	2007136245 A1	29-11-2007
US 7070153	B1	04-07-2006	US	7070153 B1	04-07-2006
			US	2007034768 A1	15-02-2007
FR 2442381	A1	20-06-1980	DE	2947430 A1	14-08-1980
			FR	2442381 A1	20-06-1980
			GB	2041490 A	10-09-1980
			JP	S5576616 A	09-06-1980
FR 2084495	A5	17-12-1971	CA	983375 A	10-02-1976
			DE	2111574 A1	30-09-1971
			DE	7109107 U	16-09-1971
			FR	2084495 A5	17-12-1971
			GB	1333305 A	10-10-1973
			JP	S5551572 B1	25-12-1980
			NL	7103221 A	14-09-1971
			SU	544361 A3	25-01-1977
			US	3668870 A	13-06-1972
			ZA	711511 B	29-12-1971

EPO FORM P0480

Pour tout renseignement concernant cette annexe : voir Journal Officiel de l'Office européen des brevets, No.12/82

REFERENCES CITED IN THE DESCRIPTION

This list of references cited by the applicant is only intended to assist the reader and does not form part of the European patent document. Although the greatest care has been taken in its design, errors or omissions cannot be excluded and the EPO accepts no liability in this respect.

Patent documents cited in the description

EP **0545860** A1 **[0002] [0003] [0054]** EP 1020212 A1 **[0002] [0004]** • EP 1020213 A1 **[0002] [0005]**

• EP 1201280 A2 **[0002] [0006] [0054]** • EP 1215091 A2 **[0002] [0006]**